HIGH-CAPACITY ELECTRIC CUSHION

TOYOTA
INDUSTRIAL EQUIPMENT

15000 – 40000 LBS.

SPECIFICATIONS

THDE1500-4000-24 | THDE3000-4000-30

CLASS
1

ELECTRIC MOTOR RIDERS

ToyotaForklift.com

CAPACITY	WHEELBASE	LOAD CENTER
15000 - 40000 LBS.	80 - 92 IN.	24 - 30 IN.

INDUSTRIES

Factory | Beverage | Food Processing | Food Storage | General Manufacturing | Retail

STANDARD FEATURES

DURABILITY

- Heavy duty planetary drive axle provides extended service life and reduced maintenance
- Heavy duty mast rails provide superior capacity retention
- Large drum-type brakes
- High visibility carriage with integral side thrust rollers
- 72/80 volt electrical system
- 2 stage wide visible mast (V)
- Rigidly constructed, welded frame
- Hook-type forks

SAFETY

- Electrical horn
- Bolt-on overhead guard
- Operator Restraint System seat
- Orange forks
- Operator Presence Sensing System (OPSS)

PERFORMANCE

- Drive and pump motors digitally controlled by AC inverter with regen braking and CANBUS interface
- Load sensing, on-demand hydraulic system
- 2-function hydraulic control valve (lift/tilt)
- Full hydraulic power steering
- Tilt lock valve only allows the tilt function to operate when the truck is running
- Flow limiters in the cylinders provide controlled lowering in the event of sudden loss of pressure
- Dual brake pedals
- Integrated multifunction display
  - Hour meter display
  - Battery discharge indicator
  - Controller fault codes

ERGONOMICS

- Mast mounted LED Headlights (2)
- LED rear combination lights (2)
- Fully sealed headlights and auxiliary lights
- Fingertip hydraulic controls
- Tilt steering column
- Hood mounted clipboard and cup holder
- Left-hand shift lever
- Long operator assist grips
- Vinyl adjustable semi-suspension seat
- Hand actuated disc type parking brake
- Low-height non-skid steps
- Padded floor cover
- Rubber mounted cab, isolated from frame to reduce noise and vibration
- 12V power inverter

SERVICEABILITY

- Hydraulic pump, hoses, tubes, and wiring harness are accessible and easy to inspect
- Easy access pump motor
- Easy access filters
- Hydraulic multi-gauge
- Wire harness loom
- Flip-open hood
- Drive motor easily accessible through removal of 4 bolts in the floor plate
- Hinged side door panel provides easy access to components

OPTIONAL EQUIPMENT

MASTS
- Wide Visible Mast (V)
- Full-Free Lift Two-Stage Mast (FV)
- Full-Free Lift Three-Stage Mast (FSV)

TIRE
- Poly Drive Tires
- Grooved Poly Drive Tires

CHASSIS OPTIONS
- Bellypan
- Anti-Static Straps

CARRIAGE
- Carriage Bumper Blocks
- Class IV Carriage
- Class V Carriage
- Pin-Type Carriage
- Integral Side Shifting Fork Positioner
- Hang-on Fork Positioner
- Hang-on Side Shifting Fork Positioner
- Hang-on Sideshifter, Class IV
- Hang-on Sideshifter, Class V
- Tilt Control (Forward)
- Tilt Control (Rearward)
- Tilt Control (Forward & Rearward)
- Tilt Level Indicator
- Forks (Standard Taper)
- Coil Contour Forks
- Polypad, Forks

CABIN/OVERHEAD GUARD
- Operator Compartment Fan
- Lexan, Front
- Lexan, Top
- Cloth Semi-Suspension Seat
- Air Ride Seat
- Orange Seatbelt
- Steering Wheel w/ Knob

BATTERY
- Battery Compartment, Top Cover
- Battery Compartment, Lock Bars
- Battery Compartment, Sliding Door
- Battery Compartment, Slides
- Battery Compartment, Roller Plate
- Battery Compartment, Tray
- Battery Connector, SB Blue
- Battery Connector, SB Green
- Battery Connector, SBX Gray
- Battery Connector, SBX Blue
- Battery Connector, SBX Green
- Battery Connector, Euro
- Battery Discharge Indicator/Hour meter w/ Interrupt

LIGHTS/ALARMS
- Amber Strobe Light
- Blue Strobe Light
- Red Strobe Light
- Clear Strobe Light
- Amber Strobe Light (Additional)
- Blue Strobe Light (Additional)
- Red Strobe Light (Additional)
- Clear Strobe Light (Additional)
- Strobe Light Guard
- Forward Facing Blue Light*
- Rear Facing Blue Light*
- Forward & Rear Facing Blue Light*
- Forward Facing Red Light*
- Rear Facing Red Light*
- Forward & Rear Facing Red Light*
- Side Mount 'Red Zone' Pedestrian Light
- Turn Signal Light Kit
- Single Forward Facing LED Worklight (Additional)
- Single Rear Facing LED Worklight
- Extra Work Lights- LED Forward Facing (pair)
- Extra Work Lights- LED Rearward Facing (pair)

HYDRAULIC
- Low Nitrogen Warning System, Steer/Brake Accumulator
- Lift Accumulator
- Tilt Accumulator

INDICATORS & MISC.
- Rear Pillar Assist Grip w/ Horn Button
- Forward Camera System Visibility Aid
- Rear Camera System Visibility Aid
- Dual Camera System Visibility Aid
- Overload Warning System
- 5 lb. Fire Extinguisher
- Back-up alarm

* Key Switch Activated
Not all options are available together or available on all models. Please see your local, authorized Toyota dealer for more information.

TRUCK SPECIFICATIONS

MODEL NUMBERS

GENERAL DATA			THDE1500-24	THDE1800-24	THDE2000-24	THDE2200-24
Load Capacity		lb (kg)	15000 (6804)	18000 (8165)	20000 (9072)	22000 (9979)
Load Center		in (mm)	24 (610)	24 (610)	24 (610)	24 (610)
Power Type			Battery	Battery	Battery	Battery
Operator Position			Seated Rider / Center Seat	Seated Rider / Center Seat	Seated Rider / Center Rider	Seated Rider / Center Seat
Tire Type	Front/Rear		Cushion / Cushion	Cushion / Cushion	Cushion / Cushion	Cushion / Cushion
Wheels (x = driven)	Front / Rear		2x/2	2x/2	2x/2	2x/2

EXTERIOR DIMENSIONS			THDE1500-24	THDE1800-24	THDE2000-24	THDE2200-24
A	Maximum Fork Height (top of forks)	in (mm)	118.40 (3007.4)	118.40 (3007.4)	98.82 (2510.0)	98.82 (2510.0)
B	Free Lift (top of forks)	in (mm)	0 (0)	0 (0)	0 (0)	0 (0)
C	Fork Size (T x W x L)	in (mm)	2.50 (63.5) x 6.00 (152.4) x 48 (1219)	2.50 (63.5) x 6.00 (152.4) x 48 (1219)	3.00 (76.2) x 7.00 (177.8) x 48 (1219)	3.00 (76.2) x 7.00 (177.8) x 48 (1219)
D	Fork Spread Max. / Min. (outer edge to edge)[1]	in (mm)	48.52 (1232.4) / 13.09 (332.4)	49.31 (1252.4) / 14.66 (372.4)	50.31 (1277.9) / 15.66 (397.8)	50.31 (1277.9) / 15.66 (397.8)
E	Tilt Range (forward / backward)	deg	6/8	6/8	6/8	6/8
F	Length to Fork Face	in (mm)	125.93 (3198.6)	128.86 (3273.0)	129.72 (3294.9)	129.72 (3294.9)
G	Overall Width	in (mm)	62.99 (1600.0)	62.99 (1600.0)	62.99 (3294.9)	62.99 (1600.0)
H	Mast Lowered Height	in (mm)	98.00 (2489.2)	98.00 (2489.2)	98.00 (2489.0)	98.00 (2489.2)
I	Mast Extended Height (top of load backrest)	in (mm)	166.03 (4217.2)	166.03 (4217.2)	156.13 (3965.7)	156.13 (3965.7)
J	Overhead Guard Height	in (mm)	93.57 (2376.7)	93.57 (2376.7)	93.57 (2376.7)	93.57 (2376.7)
K	Turning Radius (outside)	in (mm)	109.87 (2790.7)	114.26 (2902.2)	114.26 (2902.2)	114.26 (2902.2)
L	Load Distance[2]	in (mm)	24.14 (613.2)	24.95 (633.7)	25.80 (65.3)	25.80 (655.3)
M	Basic Right-Angle Stacking Aisle Width[3]	in (mm)	134.01+Load (3403.9+Load)	139.21+Load (3535.9+Load)	140.06+Load (3557.5+Load)	140.06+Load (3557.5+Load)

PERFORMANCE DATA				THDE1500-24	THDE1800-24	THDE2000-24	THDE2200-24
Speeds	Maximum Travel (fwd. / rev.)	Full Load	mph (km/h)	5.2 (8.4)	5.0 (8.0)	4.7 (7.6)	4.6 (7.4)
		No Load	mph (km/h)	6.5 (10.5)	6.3 (10.1)	5.9 (9.5)	5.7 (9.2)
	Lifting	Full Load	fpm (mm/sec)	39.5 (201)	39.5 (201)	34.5 (176)	34.5 (176)
		No Load	fpm (mm/sec)	52 (264)	52 (264)	45.3 (230)	45.3 (230)
	Lowering	Full Load	fpm (mm/sec)	60 (305)	60 (305)	54 (275)	54 (275)
		No Load	fpm (mm/sec)	45 (228)	45 (228)	38 (193)	38 (193)
Drawbar Pull	Maximum	Full Load	lb (kg)	5792 (25.8)	5703 (25.4)	5624 (25.0)	5568 (24.8)
		No Load	lb (kg)	6017 (26.8)	5973 (26.6)	5924 (26.3)	5898 (26.2)
Gradeability @ .9 Coef*	Maximum	Full Load	%	15	22.5	19.9	18.7
		No Load	%	25.5	12.8	11.3	10.4

TRUCK WEIGHTS				THDE1500-24	THDE1800-24	THDE2000-24	THDE2200-24
Total Weight (empty)			lb (kg)	23600 (10705)	26500 (12020)	29800 (13517)	31500 (14288)
Weight Distribution (w/ min. battery)	Full Load	Front	lb (kg)	36190 (16415)	41560 (18851)	46470 (21078)	49840 (22607)
		Rear	lb (kg)	2410 (1095)	2940 (1333)	3330 (1510)	3660 (1660)
	No Load	Front	lb (kg)	11540 (5235)	11800 (5352)	13140 (5960)	13170 (5974)
		Rear	lb (kg)	12060 (5470)	14700 (6668)	16660 (7557)	18330 (8314)

TIRES				THDE1500-24	THDE1800-24	THDE2000-24	THDE2200-24
Tires	Number (front / rear)			2/2	2/2	2/2	2/2
	Size (OD x W x ID)	Front		28 X 14 X 22	28 X 14 X 22	28 X 14 X 22	28 X 14 X 22
		Rear		22 X 8 X 16	22 X 8 X 16	22 X 8 X 16	22 X 8 X 16
N Wheelbase			in (mm)	75.00 (1905.0)	75.00 (1905.0)	75.00 (1905.0)	75.00 (1905.0)
Tread Width		**O** Front	in (mm)	46.25 (1174.8)	46.25 (1214.6)	46.25 (1174.8)	46.25 (1174.8)
		P Rear	in (mm)	47.82 (1214.6)	47.82 (1214.6)	47.82 (1214.6)	47.82 (1214.6)
Underclearance (full load)	**Q** Minimum with Load		in (mm)	4.25 (108.0)	4.25 (108.0)	4.25 (108.0)	4.25 (108.0)
	R Center of Wheelbase		in (mm)	4.75 (120.7)	4.75 (120.7)	4.75 (120.7)	4.75 (120.7)
Brake	Service (foot) / Parking			Hydraulic/Mechanical	Hydraulic/Mechanical	Hydraulic/Mechanical	Hydraulic/Mechanical

POWER SYSTEM			THDE1500-24	THDE1800-24	THDE2000-24	THDE2200-24
Batteries	Number		2	2	2	2
Battery (5-hour ratings)	Voltage/Capacity	V/Ah	36/1125	36 / 1125	36 / 1125	36 / 1125
	Min. Weight	lb	4380 (1986.7)	4380 (1986.7)	4800 (2177.2)	6200 (2812.3)
Electric Motors	Traction Motor (60 min. rating)	hp (kW)	42.5 (31.7)	42.5 (31.7)	42.5 (31.7)	42.5 (31.7)
	Pump Motor (15 min. rating)	hp (kW)	32.2 (24.0)	32.2 (24.0)	32.2 (24.0)	32.2 (24.0)
Auxiliary Hydraulic Function Specifications (for attachments)[4]	Max. Operating Pressure	psi (kg/cm2)	2250 (158.2)	2,250 (158.2)	2,250 (158)	2250 (158.2)
	Maximum Flow Rate	gpm (lpm)	20.6 (78)	20.6 (78)	20.6 (78)	20.6 (78)

* Computed values
1 Measured with standard forks
2 Centerline of front axle to front face of forks
3 Add load length and clearance
4 Values taken at hydraulic control valve. Does not take into consideration losses through mast plumbing (hosing, fittings, QD's, etc.).

MODEL NUMBERS

GENERAL DATA			THDE3000-24	THDE3500-24	THDE4000-24
Load Capacity		lb (kg)	30000 (13608)	35000 (15875)	40000 (18143)
Load Center		in (mm)	24 (610)	24 (610)	24 (610)
Power Type			Battery	Battery	Battery
Operator Position			Seated Rider / Center Seat	Seat Rider / Center Seat	Seated Rider / Center Rider
Tire Type	Front/Rear		Cushion / Center	Cushion / Cushion	Cushion / Cushion
Wheels (x = driven)	Front / Rear		2x/2	2x/2	2x/2

EXTERIOR DIMENSIONS		THDE3000-24	THDE3500-24	THDE4000-24
A Maximum Fork Height (top of forks)	in (mm)	103.50 (2628.9)	103.50 (2628.9)	108.75 (2762.3)
B Free Lift (top of forks)	in (mm)	0 (0)	0 (0)	0 (0)
C Fork Size (T x W x L)	in (mm)	3.50 (88.9) x 7.00 (177.8) x 48 (1219)	3.50 (88.9) X 7.00 (177.8) x 48 (1219)	4.00 (101.6) x 7.00 (177.8) x 48 (1219)
D Fork Spread Max. / Min. (outer edge to edge)[1]	in (mm)	4.00 (1371.6) / 14.00 (355.6)	54.00 (1371.6) - 14.00 (355.6)	57.50 (1460.5) - 14.00 (355.6)
E Tilt Range (forward / backward)	deg	6/7	6/7	8/6
F Length to Fork Face	in (mm)	136.59 (3569.4)	139.59 (3545.6)	155.59 (3952.0)
G Overall Width	in (mm)	64.57 (1640.1)	64.57 (1640.1)	72.44 (1840.0)
H Mast Lowered Height	in (mm)	112.75 (2863.9)	112.75 (2863.9)	120.00 (3048.0)
I Mast Extended Height (top of load backrest)	in (mm)	162.75 (2863.9)	162.75 (4133.9)	172.38 (4378.4)
J Overhead Guard Height	in (mm)	102.56 (2605.0)	102.56 (2605.0)	102.56 (2605.0)
K Turning Radius (outside)	in (mm)	123.18 (3128.8)	125.68 (3192.3)	138.86 (3527.0)
L Load Distance[2]	in (mm)	30.67 (799.0)	30.67 (779.0)	34.69 (881.1)
M Basic Right-Angle Stacking Aisle Width[3]	in (mm)	153.85+Load (3907.8+Load)	156.35+Load (3971.3+Load)	173.55+Load (4408.2+Load)

PERFORMANCE DATA				THDE3000-24	THDE3500-24	THDE4000-24
Speeds	Maximum Travel (fwd. / rev.)	Full Load	mph (km/h)	4.1 (6.6)	4.0 (6.4)	3.7 (6.0)
		No Load	mph (km/h)	5.1 (8.2)	4.8 (7.7)	4.6 (7.4)
	Lifting	Full Load	fpm (mm/sec)	24 (122)	24 (122)	16 (81)
		No Load	fpm (mm/sec)	31.5 (160)	31.5 (160)	21 (106)
	Lowering	Full Load	fpm (mm/sec)	43 (218)	43 (218)	25 (127)
		No Load	fpm (mm/sec)	24 (122)	24 (122)	18 (91)
Drawbar Pull	Maximum	Full Load	lb (kg)	5267 (23.4)	5136 (22.8)	4982 (22.2)
		No Load	lb (kg)	5717 (25.4)	5661 (25.2)	5582 (24.8)
Gradeability @ .9 Coef*	Maximum	Full Load	%	13.1	12	10.6
		No Load	%	7.1	6.2	5.4

TRUCK WEIGHTS				THDE3000-24	THDE3500-24	THDE4000-24
Total Weight (empty)			lb (kg)	41600 (18869)	45300 (20548)	52600 (23859)
Weight Distribution	Full Load	Front	lb (kg)	66470 (30150)	74310 (33706)	86210 (39104)
		Rear	lb (kg)	5130 (2327)	5990 (2717)	6390 (2898)
	No Load	Front	lb (kg)	15940 (7230)	15360 (6967)	20670 (9376)
		Rear	lb (kg)	25660 (11639)	29940 (13580)	31930 (14483)

TIRES				THDE3000-24	THDE3500-24	THDE4000-24
Tires	Number (front / rear)			2/2	2/2	4/2
	Size (OD x W x ID)	Front		28 X 16 X 22	28 X 16 X 22	28 X 10 X 22
		Rear		22 X 10 X 16	22 X 10 X 16	22 X 12 X 16
N Wheelbase			in (mm)	80.00 (2032.0)	80.00 (2032.0)	92.00 (2336.8)
Tread Width		**O** Front	in (mm)	48.25 (1255.6)	48.25 (1225.6)	52.27 (1327.7)
		P Rear	in (mm)	50.28 (1277.1)	50.28 (1277.1)	52.28 (1327.9)
Underclearance (full load)	**Q** Minimum with Load		in (mm)	4.25 (108.0)	4.25 (108.0)	4.25 (108.0)
	R Center of Wheelbase		in (mm)	4.75 (120.7)	4.75 (120.7)	4.75 (120.7)
Brake	Service (foot) / Parking			Hydraulic/Mechanical	Hydraulic/Mechanical	Hydraulic/Mechanical

POWER SYSTEM			THDE3000-24	THDE3500-24	THDE4000-24
Batteries	Number		2	2	2
Battery (5-hour ratings)	Voltage/Capacity	V/Ah	36 / 1250	36 / 1250	36 / 1250
	Min. Weight	lb	6400 (2903.0)	6400 (2903.0)	6400 (2903.0)
Electric Motors	Traction Motor (60 min. rating)	hp (kW)	42.5 (31.7)	42.5 (31.7)	42.5 (31.7)
	Pump Motor (15 min. rating)	hp (kW)	32.2 (24.0)	32.2 (24.0)	32.2 (24.0)
Auxiliary Hydraulic Function Specifications (for attachments)[4]	Max. Operating Pressure	psi (kg/cm2)	2250 (158.2)	2250 (158.2)	2250 (158.2)
	Maximum Flow Rate	gpm (lpm)	20.6 (78)	20.6 (78)	20.6 (78)

* Computed values
1 Measured with standard forks
2 Centerline of front axle to front face of forks
3 Add load length and clearance
4 Values taken at hydraulic control valve. Does not take into consideration losses through mast plumbing (hosing, fittings, QD's, etc.).

TRUCK SPECIFICATIONS

GENERAL DATA			MODEL NUMBERS THDE3000-30	THDE3500-30	THDE4000-30
Load Capacity		lb (kg)	30000 (13608)	35000 (15875)	40000 (18143)
Load Center		in (mm)	30 (762)	30 (762)	30 (762)
Power Type			Battery	Battery	Battery
Operator Position			Seated Rider / Center Seat	Seat Rider / Center Seat	Seat Rider / Center Seat
Tire Type	Front/Rear		Cushion / Cushion	Cushion / Cushion	Cushion / Cushion
Wheels (x = driven)	Front / Rear		2x/2	2x/2	2x/2

EXTERIOR DIMENSIONS			THDE3000-30	THDE3500-30	THDE4000-30
A	Maximum Fork Height (top of forks)	in (mm)	103.50 (2628.9)	108.75 (2762.3)	108.75 (2762.3)
B	Free Lift (top of forks)	in (mm)	0 (0)	0 (0)	0 (0)
C	Fork Size (T x W x L)	in (mm)	3.50 (88.9) x 7.00 (177.8) x 60 (1524)	4.00 (101.6) x 7.00 (177.8) x 60 (1524)	4.00 (101.6) x 7.00 (177.8) x 60 (1524)
D	Fork Spread Max. / Min. (outer edge to edge)[1]	in (mm)	54.00 (1371.6) - 14.00 (355.6)	57.50 (1460.5) - 14.00 (355.6)	57.50 (1460.5) - 14.00 (355.6)
E	Tilt Range (forward / backward)	deg	6/7	8/6	8/6
F	Length to Fork Face	in (mm)	139.59 (3545.6)	155.59 (3952.0)	155.59 (3952.0)
G	Overall Width	in (mm)	64.57 (1640.1)	72.44 (1840.0)	72.44 (1840.0)
H	Mast Lowered Height	in (mm)	112.75 (2863.9)	120.00 (3048.0)	120.00 (3048.0)
I	Mast Extended Height (top of load backrest)	in (mm)	162.75 (4133.9)	172.38 (4378.4)	172.38 (4378.4)
J	Overhead Guard Height	in (mm)	102.56 (2605.0)	102.56 (2605.0)	102.56 (2605.0)
K	Turning Radius (outside)	in (mm)	125.68 (3192.3)	138.86 (3527.0)	138.86 (3527.0)
L	Load Distance[2]	in (mm)	30.67 (779.0)	34.69 (881.1)	34.69 (881.1)
M	Basic Right-Angle Stacking Aisle Width[3]	in (mm)	156.35+Load (3971.3+Load)	173.55+Load (4408.2+Load)	173.55+Load (4408.2+Load)

PERFORMANCE DATA				THDE3000-30	THDE3500-30	THDE4000-30
Speeds	Maximum Travel (fwd. / rev.)	Full Load	mph (km/h)	4.1 (6.6)	3.9 (6.3)	3.7 (6.0)
		No Load	mph (km/h)	5.0 (8.0)	4.7 (7.6)	4.5 (7.2)
	Lifting	Full Load	fpm (mm/sec)	24 (122)	16 (81)	16 (81)
		No Load	fpm (mm/sec)	31.5 (160)	21 (106)	21 (106)
	Lowering	Full Load	fpm (mm/sec)	43 (218)	25 (127)	25 (127)
		No Load	fpm (mm/sec)	24 (122)	18 (91)	18 (91)
Drawbar Pull	Maximum	Full Load	lb (kg)	5237 (23.3)	5070 (22.6)	4932 (21.9)
		No Load	lb (kg)	5687 (25.3)	5595 (24.9)	5532 (24.6)
Gradeability @ .9 Coef*	Maximum	Full Load	%	12.5	10.8	9.9
		No Load	%	6	5.9	5.1

TRUCK WEIGHTS				THDE3000-30	THDE3500-30	THDE4000-30
Total Weight (empty)			lb (kg)	43600 (19777)	51700 (23451)	55900 (25356)
Weight Distribution	Full Load	Front	lb (kg)	67910 (30803)	80530 (36528)	88850 (40302)
		Rear	lb (kg)	5690 (2581)	6170 (2799)	7050 (3198)
	No Load	Front	lb (kg)	15130 (6863)	20900 (9480)	20700 (9389)
		Rear	lb (kg)	28470 (12914)	30800 (13971)	35200 (15966)

TIRES				THDE3000-30	THDE3500-30	THDE4000-30
Tires	Number (front / rear)			2/2	4/2	4/2
	Size (OD x W x ID)	Front		28 X 16 X 22	28 X 10 X 22	28 X 10 X 22
		Rear		22 X 10 X 16	22 X 12 X 16	22 X 12 X 16
N Wheelbase			in (mm)	80.00 (2032.0)	92.00 (2336.8)	92.00 (2336.8)
Tread Width		**O** Front	in (mm)	48.25 (1225.6)	52.27 (1327.7)	52.27 (1327.7)
		P Rear	in (mm)	50.28 (1277.1)	52.28 (1327.9)	52.28 (1327.9)
Underclearance (full load)	**Q** Minimum with Load		in (mm)	4.25 (108.0)	4.25 (108.0)	4.25 (108.0)
	R Center of Wheelbase		in (mm)	4.75 (120.7)	4.75 (120.7)	4.75 (120.7)
Brake	Service (foot) / Parking			Hydraulic/Mechanical	Hydraulic/Mechanical	Hydraulic/Mechanical

POWER SYSTEM			THDE3000-30	THDE3500-30	THDE4000-30
Batteries	Number		2	2	2
Battery (5-hour ratings)	Voltage/Capacity	V/Ah	36 / 1250	36 / 1250	36 / 1250
	Min. Weight	lb	6400 (2903.0)	6400 (2903.0)	6400 (2903.0)
Electric Motors	Traction Motor (60 min. rating)	hp (kW)	42.5 (31.7)	17.7 (13.2)	42.5 (31.7)
	Pump Motor (15 min. rating)	hp (kW)	32.2 (24.0)	27 (20.1)	32.2 (24.0)
Auxiliary Hydraulic Function Specifications (for attachments)[4]	Max. Operating Pressure	psi (kg/cm2)	2250 (158.2)	2250 (158.2)	2250 (158.2)
	Maximum Flow Rate	gpm (lpm)	20.6 (78)	20.6 (78)	20.6 (78)

* Computed values
1 Measured with standard forks
2 Centerline of front axle to front face of forks
3 Add load length and clearance
4 Values taken at hydraulic control valve. Does not take into consideration losses through mast plumbing (hosing, fittings, QD's, etc.).

EXTERIOR DIMENSIONS

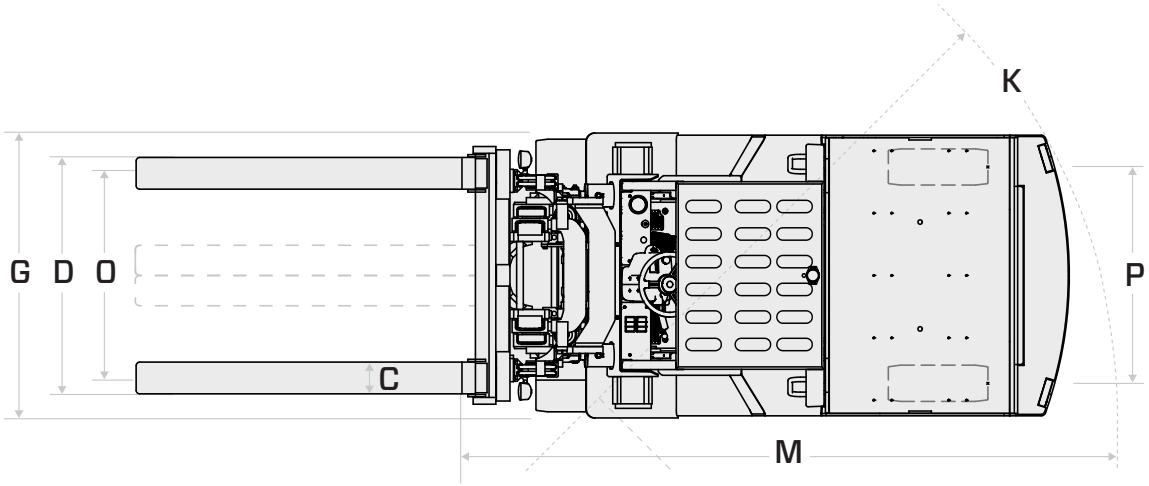

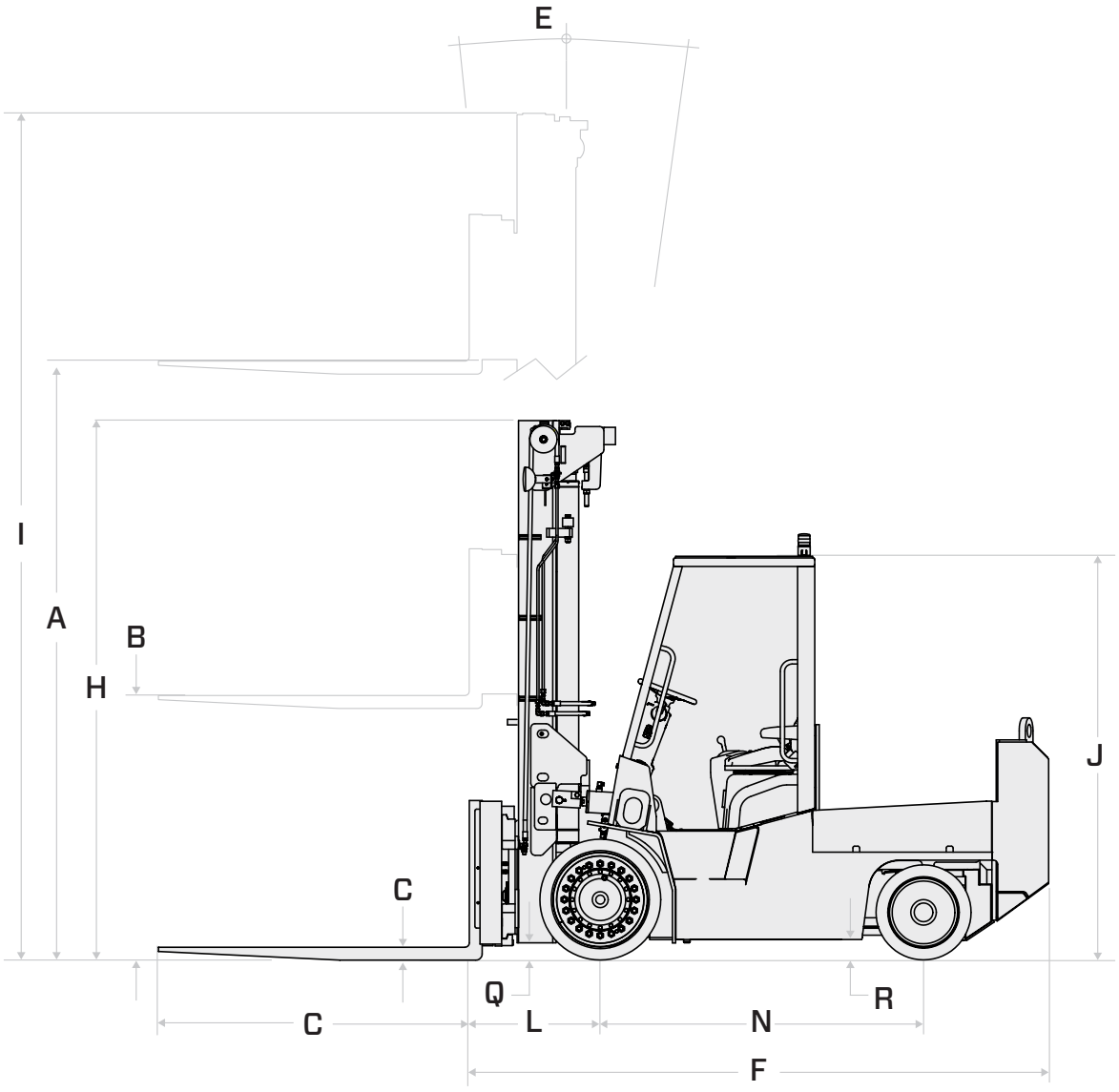

MAST SPECIFICATIONS

MAST TYPE	MAXIMUM FORK HEIGHT (TOP OF FORKS)	OVERALL HEIGHT	FREE-LIFT	TILT RANGE		LOAD CAPACITY AT 24 IN. (610 MM) LOAD CENTER
		LOWERED	WITH STANDARD LOAD BACKREST	FWD	BWD	
	in (mm)	in (mm)	in (mm)	deg	deg	lb (kg)
THDE1500-24						
Wide Visible (V)	82.75 (2102)	80 (2032)	0	6	8	15000 (6803)
	93 (2362)	85.25 (2165)	0	6	8	15000 (6803)
	118.4 (3007)	98 (2489)	0	6	8	15000 (6803)
	145.5 (3696)	111.5 (2832)	0	6	8	15000 (6803)
	176.4 (4481)	137 (3480)	0	6	8	TSDR*
Full Free-Lift 2-Stage (FV)	73.25 (1861)	85.25 (2165)	36.8 (935)	6	8	15000 (6803)
	74 (1880)	88 (2235)	29.5 (749)	6	8	15000 (6803)
	92.7 (2355)	95 (2413)	36.5 (927)	6	8	15000 (6803)
	98.75 (2508)	98 (2489)	39.5 (1003)	6	8	15000 (6803)
	125 (3175)	111.5 (2832)	53 (1346)	6	8	15000 (6803)
	131.69 (3345)	114.5 (2908)	56 (1422)	6	8	15000 (6803)
	177 (4496)	137 (3480)	78.5 (1994)	6	8	TSDR*
	200 (5080)	150 (3810)	91.5 (2316)	6	8	TSDR*
Full Free-Lift 3-Stage (FSV)	130 (3302)	83 (2108)	36.9 (937)	6	8	15000 (6803)
	140.5 (3568)	85.5 (2172)	39.4 (1001)	6	8	15000 (6803)
	142.38 (3616)	87 (2210)	40.9 (1039)	6	8	15000 (6803)
	154.16 (3915)	90 (2286)	43.9 (1115)	6	8	15000 (6803)
	178.75 (4540)	98 (2489)	51.9 (1318)	6	8	TSDR*
	219.5 (5575)	111.5 (2832)	65.4 (1661)	6	8	TSDR*
	275.5 (6997)	137 (3480)	90.9 (2309)	6	8	TSDR*
	296.5 (7531)	144 (3658)	97.9 (2487)	6	8	TSDR*
	303.3 (7703)	146.3 (3716)	100.2 (2545)	6	8	TSDR*

MAST TYPE	MAXIMUM FORK HEIGHT (TOP OF FORKS)	OVERALL HEIGHT	FREE-LIFT	TILT RANGE		LOAD CAPACITY AT 24 IN. (610 MM) LOAD CENTER
		LOWERED	WITH STANDARD LOAD BACKREST	FWD	BWD	
	in (mm)	in (mm)	in (mm)	deg	deg	lb (kg)
THDE1800-24						
Wide Visible (V)	82.75 (2102)	80 (2032)	0	6	8	18000 (8164)
	93 (2362)	85.25 (2165)	0	6	8	18000 (8164)
	118.4 (3007)	98 (2489)	0	6	8	18000 (8164)
	145.5 (3696)	111.5 (2832)	0	6	8	18000 (8164)
	176.4 (4481)	137 (3480)	0	6	8	TSDR*
Full Free-Lift 2-Stage (FV)	73.25 (1861)	85.25 (2165)	36.8 (935)	6	8	18000 (8164)
	74 (1880)	88 (2235)	29.5 (749)	6	8	18000 (8164)
	92.7 (2355)	95 (2413)	36.5 (927)	6	8	18000 (8164)
	98.75 (2508)	98 (2489)	39.5 (1003)	6	8	18000 (8164)
	125 (3175)	111.5 (2832)	53 (1346)	6	8	18000 (8164)
	131.69 (3345)	114.5 (2908)	56 (1422)	6	8	18000 (8164)
	177 (4496)	137 (3480)	78.5 (1994)	6	8	TSDR*
	200 (5080)	150 (3810)	91.5 (2316)	6	8	TSDR*
Full Free-Lift 3-Stage (FSV)	130 (3302)	83 (2108)	36.9 (937)	6	8	18000 (8164)
	140.5 (3568)	85.5 (2172)	39.4 (1001)	6	8	18000 (8164)
	142.38 (3616)	87 (2210)	40.9 (1039)	6	8	18000 (8164)
	154.16 (3915)	90 (2286)	43.9 (1115)	6	8	18000 (8164)
	178.75 (4540)	98 (2489)	51.9 (1318)	6	8	TSDR*
	219.5 (5575)	111.5 (2832)	65.4 (1661)	6	8	TSDR*
	275.5 (6997)	137 (3480)	90.9 (2309)	6	8	TSDR*
	296.5 (7531)	144 (3658)	97.9 (2487)	6	8	TSDR*
	303.3 (7703)	146.3 (3716)	100.2 (2545)	6	8	TSDR*

*TSDR required to determine capacity to maximum fork height

MAST TYPE	MAXIMUM FORK HEIGHT (TOP OF FORKS)	OVERALL HEIGHT	FREE-LIFT	TILT RANGE		LOAD CAPACITY AT 24 IN. (610 MM) LOAD CENTER
		LOWERED	WITH STANDARD LOAD BACKREST	FWD	BWD	
	in (mm)	in (mm)	in (mm)	deg	deg	lb (kg)
THDE2000-24						
Wide Visible (V)	69 (1753)	83 (2108)	0	6	8	20000 (9071)
	73.4 (1864)	85.5 (2172)	0	6	8	20000 (9071)
	98.8 (2512)	98 (2489)	0	6	8	20000 (9071)
	125.9 (3198)	111.5 (2832)	0	6	8	20000 (9071)
	147.4 (3744)	122.3 (3106)	0	6	8	20000 (9071)
	156.8 (3983)	137 (3480)	0	6	8	20000 (9071)
	162.9 (3376)	140 (3556)	0	6	8	20000 (9071)
	198.5 (5042)	154 (3912)	0	6	8	TSDR*
	275 (6985)	190 (4826)	0	6	8	TSDR*
Full Free-Lift 2-Stage (FV)	73.25 (1861)	85.25 (2165)	26.8 (681)	6	8	20000 (9071)
	74 (1880)	88 (2235)	29.5 (749)	6	8	20000 (9071)
	92.7 (2355)	95 (2113)	36.5 (927)	6	8	20000 (9071)
	98.75 (2508)	98 (2489)	39.5 (1003)	6	8	20000 (9071)
	125 (3175)	111.5 (2832)	53 (1346)	6	8	20000 (9071)
	131.69 (3345)	114.5 (2908)	56 (1422)	6	8	20000 (9071)
	177 (4496)	137 (3480)	78.5 (1994)	6	8	TSDR*
	200 (5080)	150 (3810)	91.5 (2324)	6	8	TSDR*
Full Free-Lift 3-Stage (FSV)	108.75 (2762)	85.5 (2172)	27 (686)	6	8	20000 (9071)
	122.5 (3112)	90 (2286)	31.5 (800)	6	8	20000 (9071)
	146.75 (3727)	98 (2489)	39.5 (1003)	6	8	20000 (9071)
	150.5 (3823)	98 (2489)	39.5 (1003)	6	8	20000 (9071)
	187.38 (4759)	111.5 (2832)	53 (1346)	6	8	TSDR*
	243.88 (6195)	137 (3480)	78.5 (1994)	6	8	TSDR*
	264 (6706)	137 (3480)	78.5 (1994)	6	8	TSDR*
	274 (6960)	147 (3734)	88.5 (2248)	6	8	TSDR*
	327 (8306)	165 (4191)	106.5 (2705)	6	8	TSDR*

MAST TYPE	MAXIMUM FORK HEIGHT (TOP OF FORKS)	OVERALL HEIGHT	FREE-LIFT	TILT RANGE		LOAD CAPACITY AT 24 IN. (610 MM) LOAD CENTER
		LOWERED	WITH STANDARD LOAD BACKREST	FWD	BWD	
	in (mm)	in (mm)	in (mm)	deg	deg	lb (kg)
THDE2000-24						
Wide Visible (V)	69 (1753)	83 (2108)	0	6	8	22000 (9979)
	73.4 (1864)	85.5 (2172)	0	6	8	22000 (9979)
	98.8 (2512)	98 (2489)	0	6	8	22000 (9979)
	125.9 (3198)	111.5 (2832)	0	6	8	22000 (9979)
	147.4 (3744)	122.3 (3106)	0	6	8	22000 (9979)
	156.8 (3983)	137 (3480)	0	6	8	22000 (9979)
	162.9 (3376)	140 (3556)	0	6	8	22000 (9979)
	198.5 (5042)	154 (3912)	0	6	8	TSDR*
	275 (6985)	190 (4826)	0	6	8	TSDR*
Full Free-Lift 2-Stage (FV)	73.25 (1861)	85.25 (2165)	26.8 (681)	6	8	22000 (9979)
	74 (1880)	88 (2235)	29.5 (749)	6	8	22000 (9979)
	92.7 (2355)	95 (2113)	36.5 (927)	6	8	22000 (9979)
	98.75 (2508)	98 (2489)	39.5 (1003)	6	8	22000 (9979)
	125 (3175)	111.5 (2832)	53 (1346)	6	8	22000 (9979)
	131.69 (3345)	114.5 (2908)	56 (1422)	6	8	22000 (9979)
	177 (4496)	137 (3480)	78.5 (1994)	6	8	TSDR*
	200 (5080)	150 (3810)	91.5 (2324)	6	8	TSDR*
Full Free-Lift 3-Stage (FSV)	108.75 (2762)	85.5 (2172)	27 (686)	6	8	22000 (9979)
	122.5 (3112)	90 (2286)	31.5 (800)	6	8	22000 (9979)
	146.75 (3727)	98 (2489)	39.5 (1003)	6	8	22000 (9979)
	150.5 (3823)	98 (2489)	39.5 (1003)	6	8	22000 (9979)
	187.38 (4759)	111.5 (2832)	53 (1346)	6	8	TSDR*
	243.88 (6195)	137 (3480)	78.5 (1994)	6	8	TSDR*
	264 (6706)	137 (3480)	78.5 (1994)	6	8	TSDR*
	274 (6960)	147 (3734)	88.5 (2248)	6	8	TSDR*
	327 (8306)	165 (4191)	106.5 (2705)	6	8	TSDR*

MAST SPECIFICATIONS

MAST TYPE	MAXIMUM FORK HEIGHT (TOP OF FORKS)	OVERALL HEIGHT	FREE-LIFT	TILT RANGE		LOAD CAPACITY AT 24 IN. (610 MM) LOAD CENTER
		LOWERED	WITH STANDARD LOAD BACKREST	FWD	BWD	
	in (mm)	in (mm)	in (mm)	deg	deg	lb (kg)
THDE3000-24						
Wide Visible (V)	103.5 (2629)	112.75 (2864)	0	9	9	30000 (13607)
	114 (2896)	118 (2997)	0	9	9	30000 (13607)
	119.25 (3029)	120.63 (3064)	0	9	9	30000 (13607)
	126.5 (3213)	124.25 (3156)	0	9	9	30000 (13607)
	148 (3759)	135 (3429)	0	9	9	30000 (13607)
	160 (4064)	141 (3581)	0	9	9	TSDR*
	171 (4343)	146.5 (3721)	0	9	9	TSDR*
Full Free-Lift 2-Stage (FV)	86.5 (2197)	93 (2362)	56 (1422)	9	9	30000 (13607)
	110.75 (2813)	103 (2616)	46 (1168)	9	9	30000 (13607)

MAST TYPE	MAXIMUM FORK HEIGHT (TOP OF FORKS)	OVERALL HEIGHT	FREE-LIFT	TILT RANGE		LOAD CAPACITY AT 24 IN. (610 MM) LOAD CENTER
		LOWERED	WITH STANDARD LOAD BACKREST	FWD	BWD	
	in (mm)	in (mm)	in (mm)	deg	deg	lb (kg)
THDE3500-24						
Wide Visible (V)	103.5 (2629)	112.75 (2864)	0	9	9	35000 (15875)
	114 (2896)	118 (2997)	0	9	9	35000 (15875)
	119.25 (3029)	120.63 (3064)	0	9	9	35000 (15875)
	126.5 (3213)	124.25 (3156)	0	9	9	35000 (15875)
	148 (3759)	135 (3429)	0	9	9	35000 (15875)
	160 (4064)	141 (3581)	0	9	9	TSDR*
	171 (4343)	146.5 (3721)	0	9	9	TSDR*
Full Free-Lift 2-Stage (FV)	92.5 (2350)	99 (2515)	41 (1041)	9	9	35000 (15875)
	102.5 (2603)	105 (2667)	47 (1194)	9	9	35000 (15875)
	139.5 (3543)	120 (3048)	50 (1270)	9	9	35000 (15875)

MAST TYPE	MAXIMUM FORK HEIGHT (TOP OF FORKS)	OVERALL HEIGHT	FREE-LIFT	TILT RANGE		LOAD CAPACITY AT 24 IN. (610 MM) LOAD CENTER
		LOWERED	WITH STANDARD LOAD BACKREST	FWD	BWD	
	in (mm)	in (mm)	in (mm)	deg	deg	lb (kg)
THDE4000-24						
Wide Visible (V)	108.75 (2762)	120 (3048)	0	9	9	40000 (18143)
	120.75 (3067)	126 (3200)	0	9	9	40000 (18143)
Full Free-Lift 2-Stage (FV)	124 (3150)	120 (3048)	50 (1270)	9	9	40000 (18143)
	140 (3556)	120 (3048)	50 (1270)	9	9	40000 (18143)

*TSDR required to determine capacity to maximum fork height

MAST TYPE	MAXIMUM FORK HEIGHT (TOP OF FORKS)	OVERALL HEIGHT	FREE-LIFT	TILT RANGE		LOAD CAPACITY AT 30 IN. (900 MM) LOAD CENTER
		LOWERED	WITH STANDARD LOAD BACKREST	FWD	BWD	
	in (mm)	in (mm)	in (mm)	deg	deg	lb (kg)
THDE3000-30						
Wide Visible (V)	103.5 (2629)	112.75 (2864)	0	6	7	30000 (13607)
	114 (2896)	118 (2997)	0	6	7	30000 (13607)
	119.25 (3029)	120.63 (3064)	0	6	7	30000 (13607)
	126.5 (3213)	124.25 (3156)	0	6	7	30000 (13607)
	148 (3759)	135 (3429)	0	6	7	30000 (13607)
	160 (4064)	141 (3581)	0	6	7	TSDR*
	171 (4343)	146.5 (3721)	0	6	7	TSDR*
Full Free-Lift 2-Stage (FV)	92.5 (2350)	99 (2515)	41 (1041)	6	7	30000 (13607)
	102.5 (2603)	105 (2667)	47 (1194)	6	7	30000 (13607)
	139.5 (3543)	120 (3048)	50 (1270)	6	7	30000 (13607)

MAST TYPE	MAXIMUM FORK HEIGHT (TOP OF FORKS)	OVERALL HEIGHT	FREE-LIFT	TILT RANGE		LOAD CAPACITY AT 30 IN. (900 MM) LOAD CENTER
		LOWERED	WITH STANDARD LOAD BACKREST	FWD	BWD	
	in (mm)	in (mm)	in (mm)	deg	deg	lb (kg)
THDE3500-30						
Wide Visible (V)	103.5 (2629)	112.75 (2864)	0	6	7	35000 (15875)
	114 (2896)	118 (2997)	0	6	7	35000 (15875)
	119.25 (3029)	120.63 (3064)	0	6	7	35000 (15875)
	126.5 (3213)	124.25 (3156)	0	6	7	35000 (15875)
	148 (3759)	135 (3429)	0	6	7	35000 (15875)
	160 (4064)	141 (3581)	0	6	7	TSDR*
	171 (4343)	146.5 (3721)	0	6	7	TSDR*
Full Free-Lift 2-Stage (FV)	92.5 (2350)	99 (2515)	41 (1041)	6	7	35000 (15875)
	102.5 (2603)	105 (2667)	47 (1194)	6	7	35000 (15875)
	139.5 (3543)	120 (3048)	50 (1270)	6	7	35000 (15875)

MAST TYPE	MAXIMUM FORK HEIGHT (TOP OF FORKS)	OVERALL HEIGHT	FREE-LIFT	TILT RANGE		LOAD CAPACITY AT 30 IN. (900 MM) LOAD CENTER
		LOWERED	WITH STANDARD LOAD BACKREST	FWD	BWD	
	in (mm)	in (mm)	in (mm)	deg	deg	lb (kg)
THDE4000-30						
Wide Visible (V)	108.75 (2762)	120 (3048)	0	8	6	40000 (18143)
	120.75 (3067)	126 (3200)	0	8	6	40000 (18143)
Full Free-Lift 2-Stage (FV)	124 (3150)	120 (3048)	0	8	6	40000 (18143)
	140 (3556)	120 (3048)	0	8	6	40000 (18143)

*TSDR required to determine capacity to maximum fork height

Some product features described herein are optional. Please consult your dealer for specifications. Details of specifications and equipment are based on information available at time of printing and may change without notice.

TOYOTA
INDUSTRIAL EQUIPMENT

00722THDE1500SS
©2017 Toyota Material Handling, U.S.A., Inc.